REV.	ECN NO	LOCATIONS	DESCRIPTION	DATE

Kinghelm®

型号：KH-MICRO5P-ZH

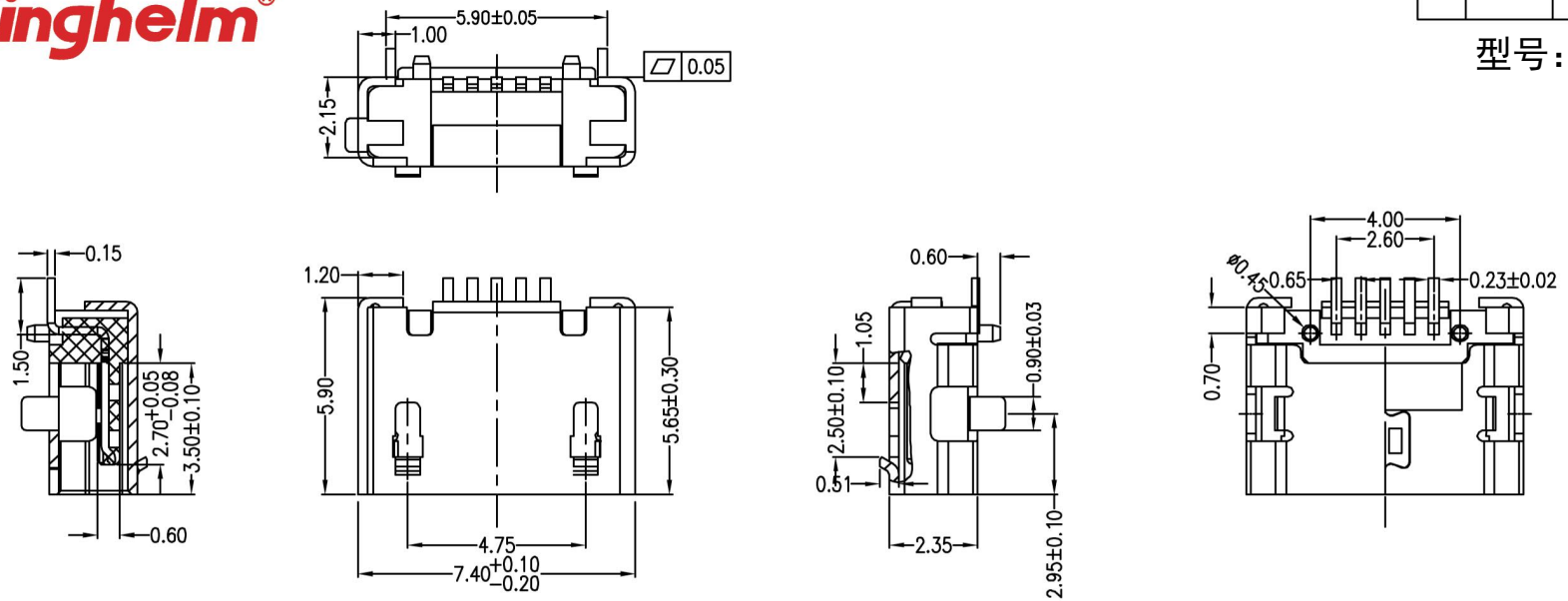

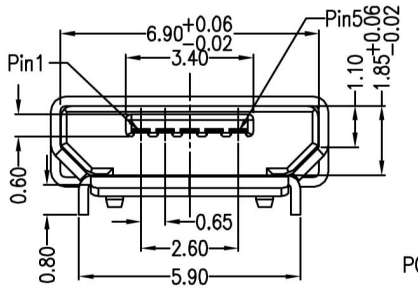

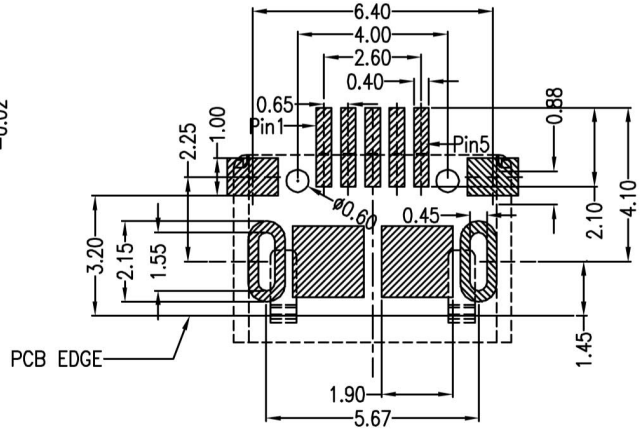

RECOMMANDED PCB LAYOUT

Note:
1.Material:
1.1 Housing: High temperature thermoplastic with g.f,UL94v−0
1.2 Contact: copper alloy,t=0.20mm
1.3 Shell: copper alloy,t=0.25mm
2.Specification:
2.1 Current rating: 1 A Max.
2.2 Dielectric withstanding voltage: 100 V(ac) for 1 min.
2.3 Contact resistance: 50 mW Max.
2.4 Insulation resistance: 100 MW Min.
2.5 Total mating force: 3.57 Kgf Max.
2.6 Total unmating force: 1.0 Kgf Min.0.81~2.05 Kgf Min.after 10000 insertion/extration cycles
2.7 Temperature range: −30°C~80°C

A 01 S B X X X X X X X 1−243
① ② ③ ④ ⑤ ⑥ ⑦ ⑧ ⑨ ⑩ ⑪ ⑫ ⑬

① 产品代号 A:成品
② 产品系列 01:micro usb 5pin
③ 产品类别 S:母座
④ 产品类型 B:B TYPE
⑤ 外壳材质 1:C2680R-H 5:SPCC
⑥ 外壳电镀 0:素材;1: Ni100u'';2:雾Sn100u'';3:Ni+Au1u''(脚);4:全Au1u''
⑦ 端子材质 4:C5191R-EH 2:C2680R-EH
⑧ 端子电镀 0:素材;1:全Au1u'';2:全Au1.5u'';3:全Au3u'';4:全Au10u'';5:全Au15u'';6:全Au30u'';7:亮Sn+Au1u'';8:亮Sn+Au3u''
A:雾锡+Au1u'';B:雾锡Au1.5u'';C:雾锡Au3u'';D:雾锡Au5u''
⑨ 主体材质 1:LCP
⑩ 主体颜色 B:黑色 W:白色
⑪ 包装方式 1:吸塑管;2:卷带;4:pe袋
⑫ 下板类型 1:dip(插板)
⑬ 细节流水 037:Micro usb 5s B Type Smt有焊脚插板5.9有柱

PART NO:	MATERAL: SEE NOTE	深圳市金航标电子有限公司	WWW.BDS666.COM
MODEL NO: XX	FINSH: SEE NOTE	KH-MICRO5P-ZH	0755-83044319
UNIT: MM / SIZE: A4	COLOR: SEE NOTE	TITLE: Micro usb 5s BType Smt 有焊脚插板5.9有柱无导位长针	
TOLERANCE UNSPECIFIED .x 0.25 .xx 0.20 .xxx 0.1 Ang. 2°	DR:	DWG NO:	REV: A
	CHK:		
	APP:	SCALE: 5:1 / DATE:	